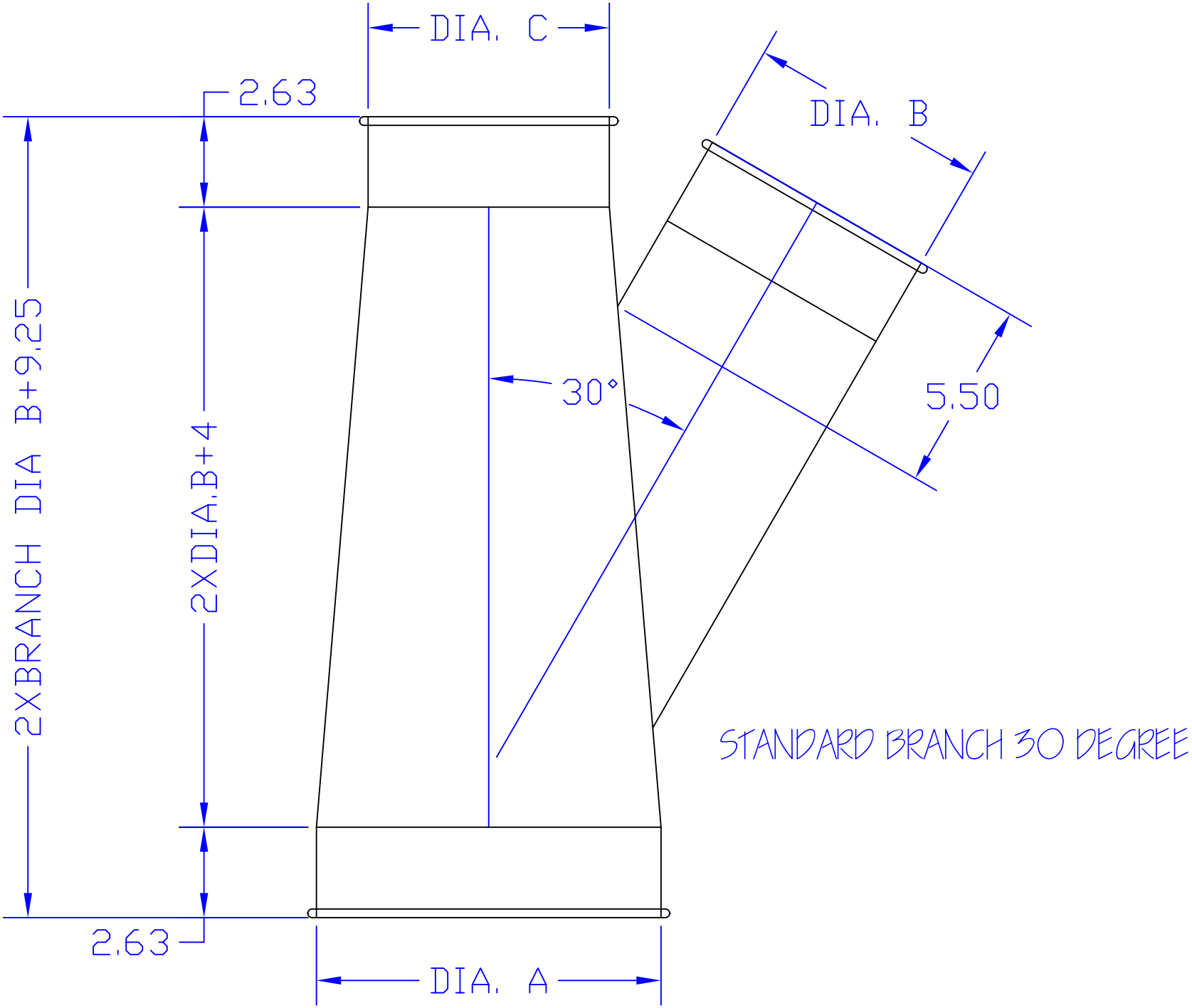

STANDARD BRANCH 30 DEGREE